PART NO.			
902–338			
REVISIONS			
LTR	ECO NO.	DRAWN	APPR.
.			
.			

Example Part Number

902–338A1504855*C

BASIC ADAPTER NO.

ADAPTER STYLE
A = 45° ADAPTER
R = 90° ADAPTER

CONNECTOR ORDER NUMBER

SHELL SIZE	A ±.031	B ±.031	C ±.010	D ±.015	MAX ENTRY
0 9	1.203	.520	.984	1.000	0 6
1 5	1.531	.520	1.312	1.125	0 6
2 5	2.078	.520	1.852	1.188	0 6
3 7	2.718	.520	2.500	1.188	0 6
5 0	2.625	.629	2.406	1.312	0 8
1 0 4	2.718	.690	2.500	1.312	0 9

CABLE ENTRY ORDER NUMBER

ENTRY NUMBER	ØZ ±.010
01	.125
02	.188
03	.265
04	.312
05	.390
06	.415
0	.500
08	.525
09	.570

PLATING CODE NUMBER
CODE 55 – CADMIUM PER QQ–P–416, TYPE II, CLASS 3, OVER ELECTROLESS
CODE 56 – ELECTROLESS NICKEL, PER AMS2404F
FOR ADDITIONAL FINISH OPTIONS, SEE CATALOG TABLE 4.

BAND OPTION
1 – NOT REQUIRED, ADAPTER ONLY
2 – SUPPLIED WITH (1) 214L005 1/8" BAND

JACKSCREW TYPE
F = 2 MALE FILLISTER
H = 2 MALE HEX SOCKET
J = 2 FEMALE JACKPOST
OMIT IF JACKSCREWS NOT REQUIRED 3.

ADD 'C' FOR ADAPTER SUPPLIED WITH SCREW RETENTION CLIPS, OMIT IF NOT REQUIRED. 3.

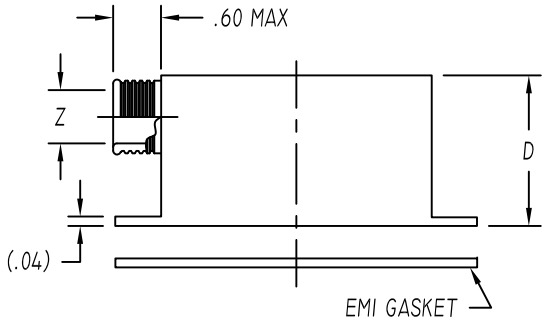

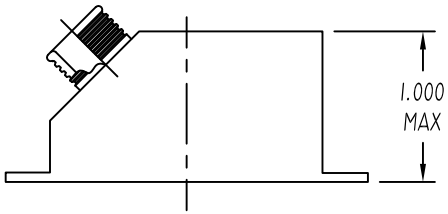

3. NYLON WASHER
SEE PART NUMBER

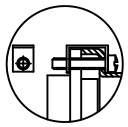

3. RETENTION CLIP
SEE PART NUMBER

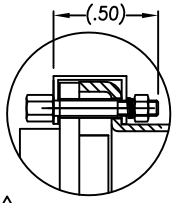

3. FEMALE JACK POST
SEE PART NUMBER

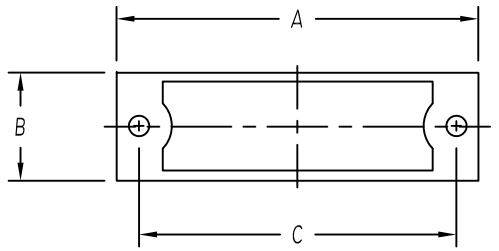

NOTES: UNLESS OTHERWISE SPECIFIED.

1. ASSEMBLY IDENTIFICATION PER MIL–STD–1285.
2. MATERIAL: ADAPTER – ALUMINUM ALLOY.
   HARDWARE – SST
   EMI GASKET – ALUMINUM IMPREGNATED NEOPRENE

3. SCREWS CAPTIVATED WITH NYLON WASHERS STANDARD, NOT SUPPLIED WITH 'C' OPTION.

4. JACK POST SUPPLIED WITH 2 FLAT WASHERS, 1 LOCK WASHER AND 1 HEX NUT.

The information disclosed herein is the property of, and a proprietary item originated by ELECTRO ADAPTER, INC. , who reserves all patent, proprietary design, use, sale, manufacturing and reproduction rights thereto; except for uses expressly granted to the United States Government and items which are vendor parts, disclosure shall not be made without written consent from ELECTRO ADAPTER, INC.

UNLESS OTHERWISE SPECIFIED
DIMENSIONS ARE IN INCHES

TOLERANCES: ANGLES ± 2° DECIMALS .XX = ± .06 .XXX = ± .031

DO NOT SCALE DRAWING

DRAWN	SJDC	DATE 07/07/14
CHKD		DATE
APVD	GF	DATE 07/15/14
RELEASED	GF	DATE 07/15/14

ELECTRO ADAPTER, INC.
CHATSWORTH, CA. 91311–6189

DRAWING TITLE
SPECIAL 45° & 90° ADAPTER
EMI/ EFI, BAND TERMINATION,
FOR MIL–DTL–24308 CONNECTORS

SIZE	CAGE CODE	DRAWING NUMBER	REV.
A	31461	902–338	–

SCALE: NONE /0/SALES/902/338 SHEET 1 OF 1